Test report is for reference only.

TEST REPORT

For

JXWBKG-T-4-0.5-20

Technical Specification

Frequency Range(GHz)	0.5-20
Insertion Loss(dB)	5.2 max
Isolation(dB)	60 min
VSWR	2.0 max
Switching Speed(ns)	50
Power handling(W)	0.5 CW
Operating Temperature(°C)	-55 ~ +85
Storage Temperature(°C)	-65 ~ +125
Net Weight（Kg）	0.06 Around

Outline Drawing (Size: mm)

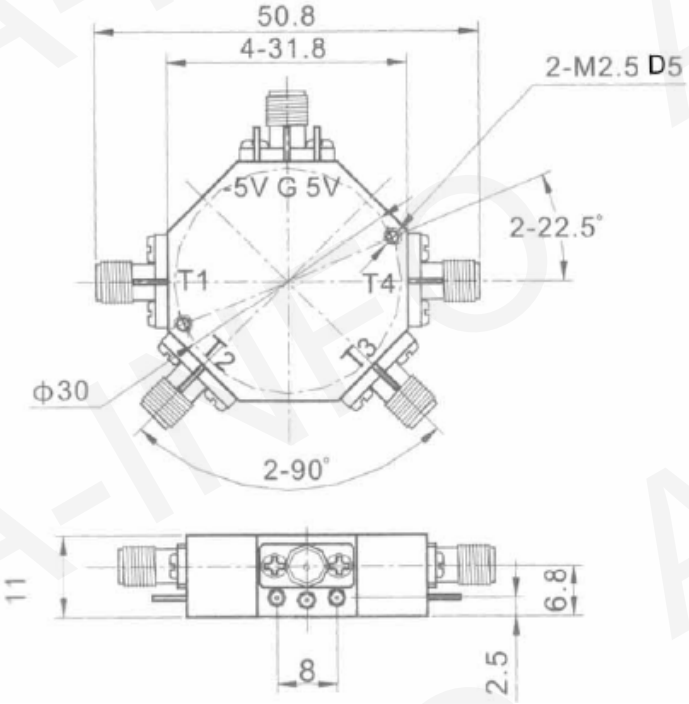

Test Results

Port	Frequency (GHz)	Insertion Loss(dB) max	VSWR max	Isolation(dB) min
T0-T1	0.5-20	4.39	1.89	72.7
T0-T2	0.5-20	3.99	1.70	71.8
T0-T3	0.5-20	4.77	1.79	69.6
T0-T4	0.5-20	4.50	1.84	72.4